INSTRUCTION MANUAL

Remote-controlled air filtration kit
for Bambu Lab H2C | H2D | H2S

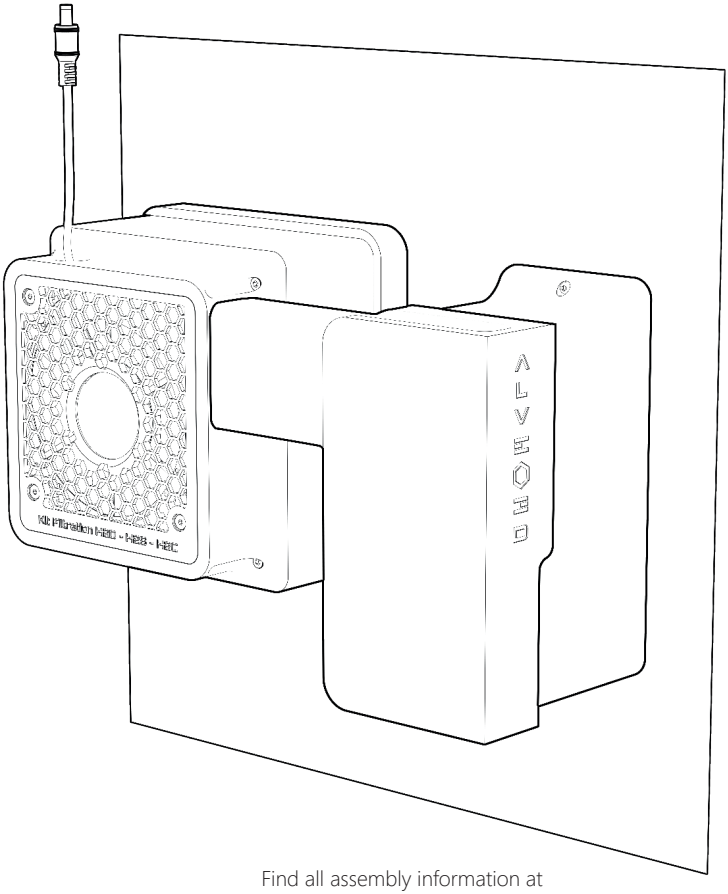

Find all assembly information at
https://www.alveo3d.com/en/product/filter-hepa14-activated-carbon-bambu-lab-h2c-h2d-H2s/

ALVEO3D

v1.0 EN

INSTALLATION RECOMMENDATIONS

Assembling the kit requires printing the parts that make up the structure. You can print these parts by following the links in the email received after your order,
or at the following address:
https://www.alveo3d.com/download-kit-bambulab-h2c-h2d-h2s/

Assembly is carried out directly on the rear panel of the machine, at the location of the existing fan. No modification to the machine is required.
The kit is compatible with AMS models on H2C, H2D and H2S.

The Bambu Lab kit has been designed to offer maximum protection to users, without requiring structural modifications or the addition of an enclosure around the machine. Print the parts in PETG or any filament that can withstand a maximum temperature of 60°C.

System performance :
Thanks to the use of the P4D-R model, the kit ensures high efficiency in treating harmful emissions, including ultrafine particles and volatile organic compounds (VOCs).
The filter and fan (BLHP2432_H10) have been carefully selected to :

- Limit noise.
- Provide sufficient airflow, ensuring lower pressure inside the printing chamber.
- Prevent polluted air leaks outside the machine.

The two-part design includes a guide that redirects recirculated air back into the machine, using the waste-extraction opening for filament change debris.

Additional benefits :
Thermal recirculation: This guide helps maintain a stable temperature in the enclosure, essential for printing filaments that require high temperatures. This compensates for the automatic shutdown of the original filtration system.
Exhaust flap: For filaments that require a lower printing temperature, a dedicated flap allows the air to be vented efficiently.

External placement :
We chose to install the system outside the enclosure to avoid any potential conflict with the machine's internal mechanical components, while ensuring optimal air-pressure management.

SAFETY

Read the instructions before use

1. Power on the fan only after assembling the device with the protective grilles to avoid any risk of injury.

2. Use only the recommended supply voltages to power the system and avoid damaging the electronic components.

3. Avoid any contact with the electronic board when it is powered on.

4. Observe the following operating ranges:
   - Maximum temperature : 60°C
   - Optimal temperature : 0-40°C

SUPPLIED MATERIALS

Items included in the kit*

- Remote control and IR receiver (battery included)

- 24 V power supply

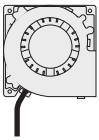

- Fan BLHP2432_H10

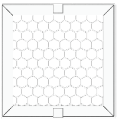

- P4D-R filter

- 3x M4x40 mm countersunk screws

- 7x M4 hex nuts

- 6x BT3 14 mm

- 4x M4x14 mm cylindrical head screws

- 2x NBR70 O-rings

- EPDM gasket 1.20 m

- Corrugated hose: 1 m extended, 25 cm folded

- Sealed plastic bag (for used filter)

SUPPLIED MATERIALS

Parts printed by the user

- Filtration system bracket

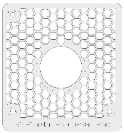

- Fan guard grille

- Filter location

- Fan location

- Waste outlet plug

- Air inlet support

- Sliding block

REQUIRED MATERIALS

Non-supplied items required to assemble the kit

- Hex keys 2.5 mm, 2 mm and 3 mm (for M4 screws)

- Scissors

Non-supplied items recommended for filter replacement

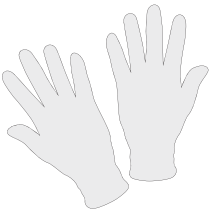

- Gloves

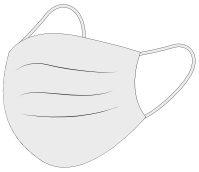

- FFP2 mask (minimum)

1. PREPARING THE MACHINE

1. Remove the screws following your Bambu Lab printer guide, then remove the cover plate.

2. To install the kit, remove the fan shutters. For more information, see: https://wiki.bambulab.com/en/h2/maintenance/replace-active-chamber-exhaust.

3. Reinstall the cover plate and screws following the instructions in your machine's guide. Do not reinstall the shutters.

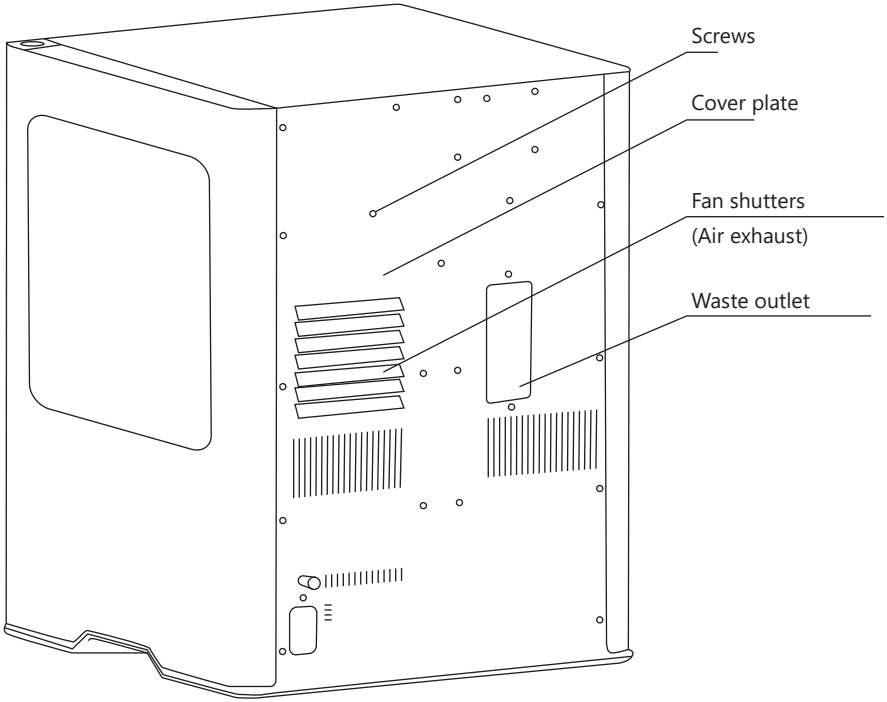

2. MOUNTING THE HOUSING BRACKET ON THE PANEL

1. Locate the holes on the rear panel that will be used to install
2. the filtration system bracket.
3. Place the EPDM gasket in the groove on the back of the bracket part.
4. Cut with scissors if the gasket is too long.
5. Install the bracket using the 12 mm metal self-tapping screws.
6. The new system mounts directly onto the original system, without modification.

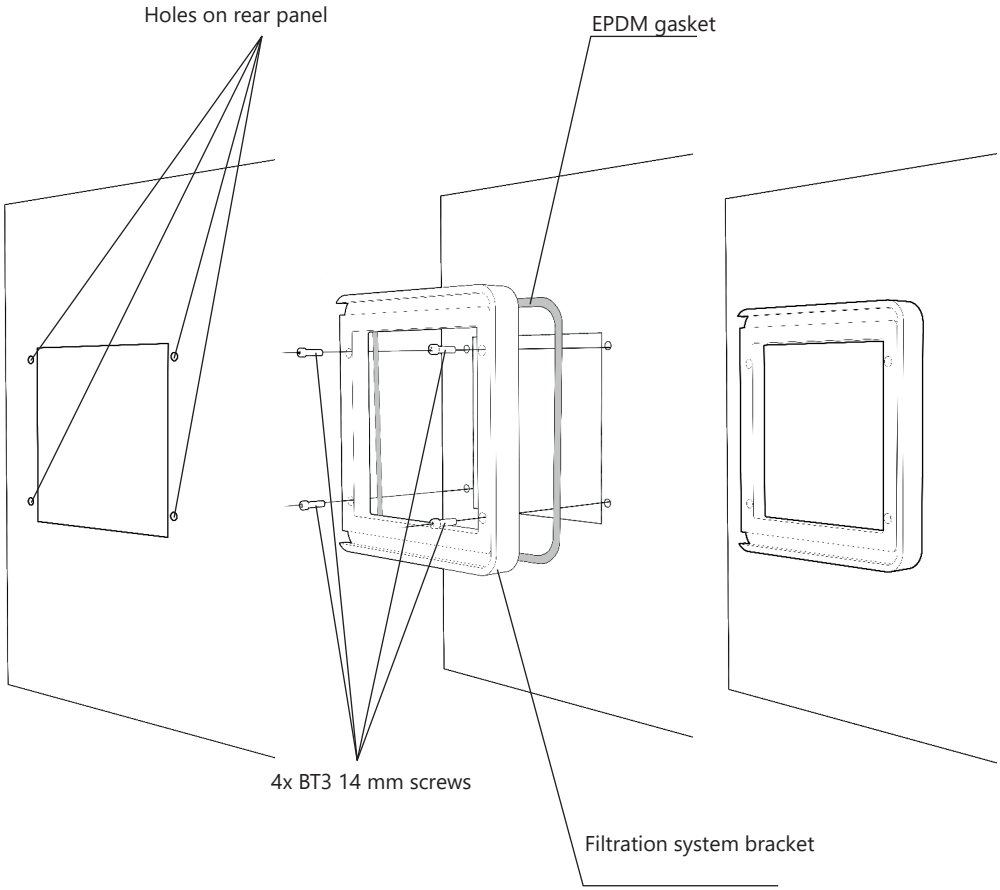

3. HOUSING ASSEMBLY

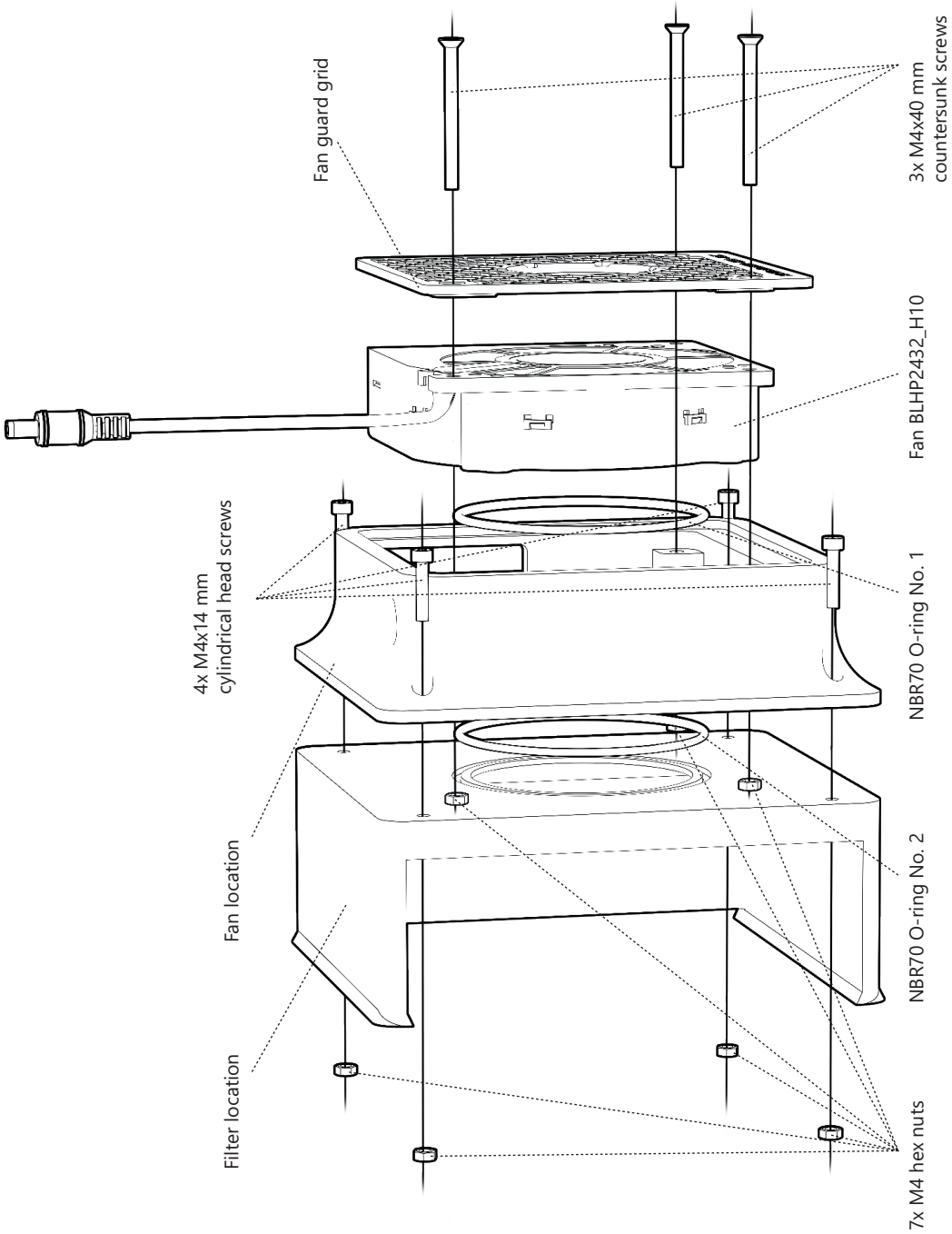

4. INSTALLING THE HOUSING ON THE BRACKET

Install the filtration housing onto the bracket screwed to the rear panel.
Slide the housing into the bracket rails.

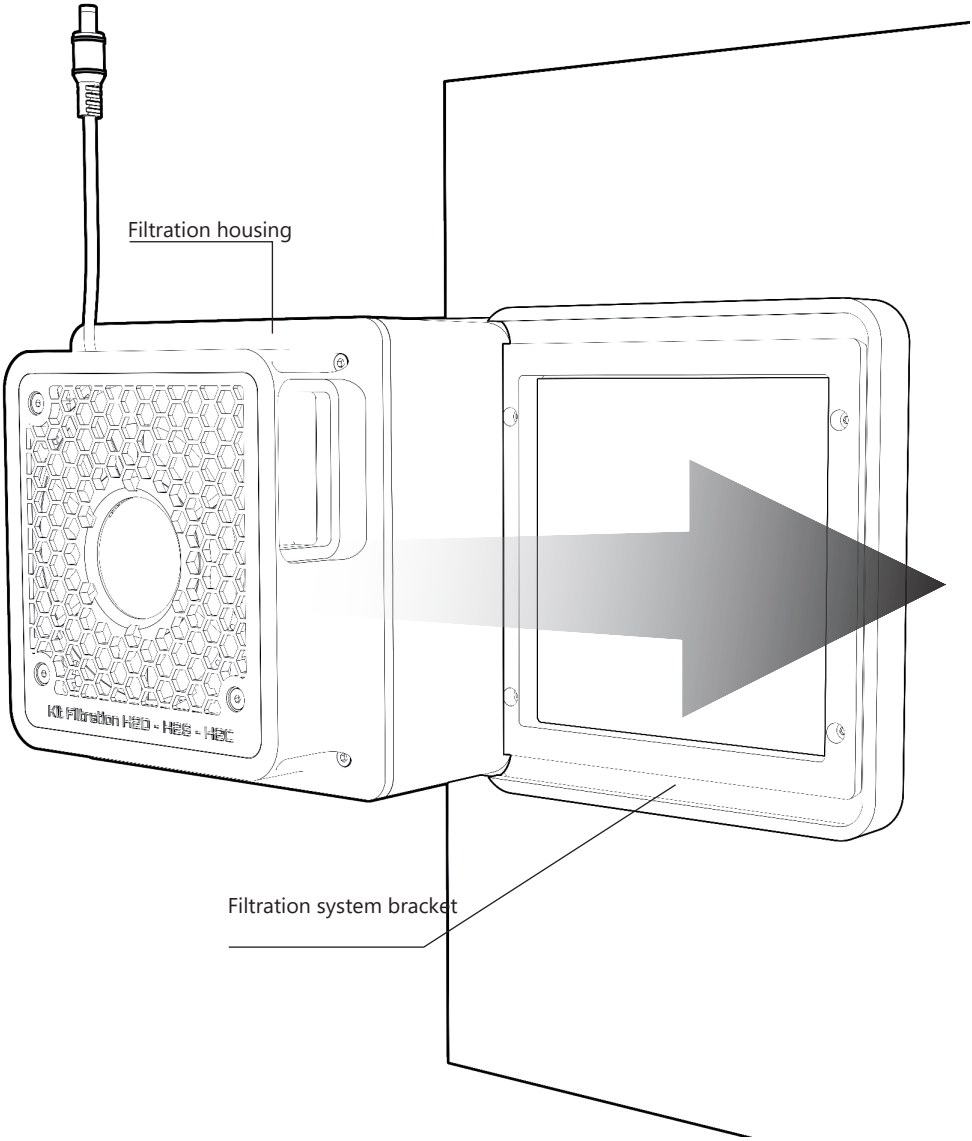

5. INSERTING THE P4D-R FILTER

1. Insert the filter with the activated carbon (black) side facing the fan.
2. Push the filter all the way in to ensure a proper seal.

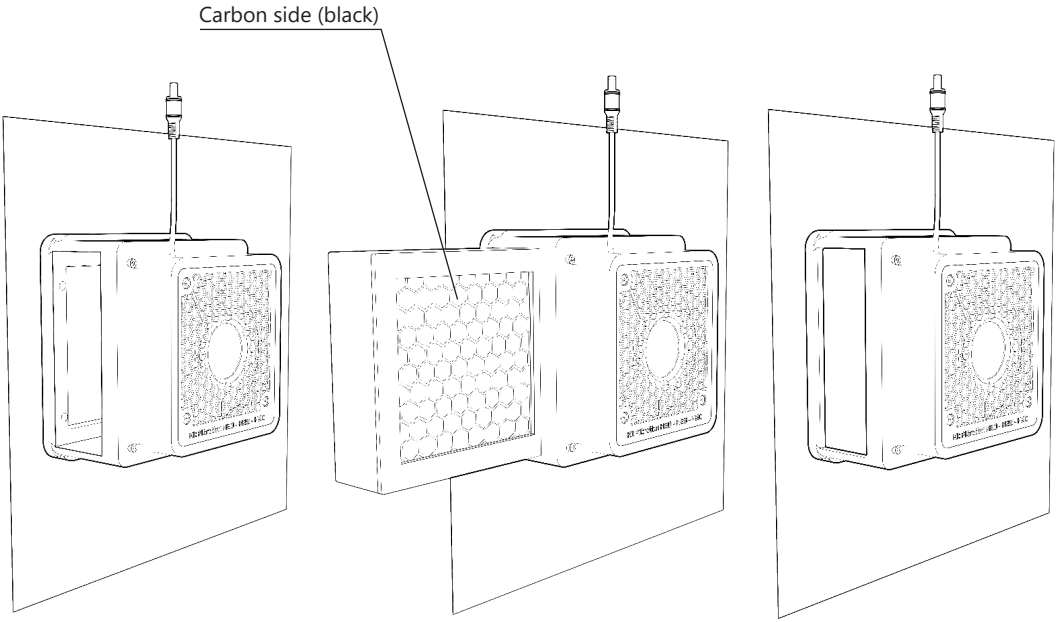

1. Insert the filter

2. Activated carbon side facing the fan

3. Push the filter all the way in

6. AIR INLET SUPPORT

1. Prepare the EPDM gasket on the air inlet support by cutting
2. a piece long enough to surround
3. the intended area.
4. Install the support using BT3 12 mm screws.

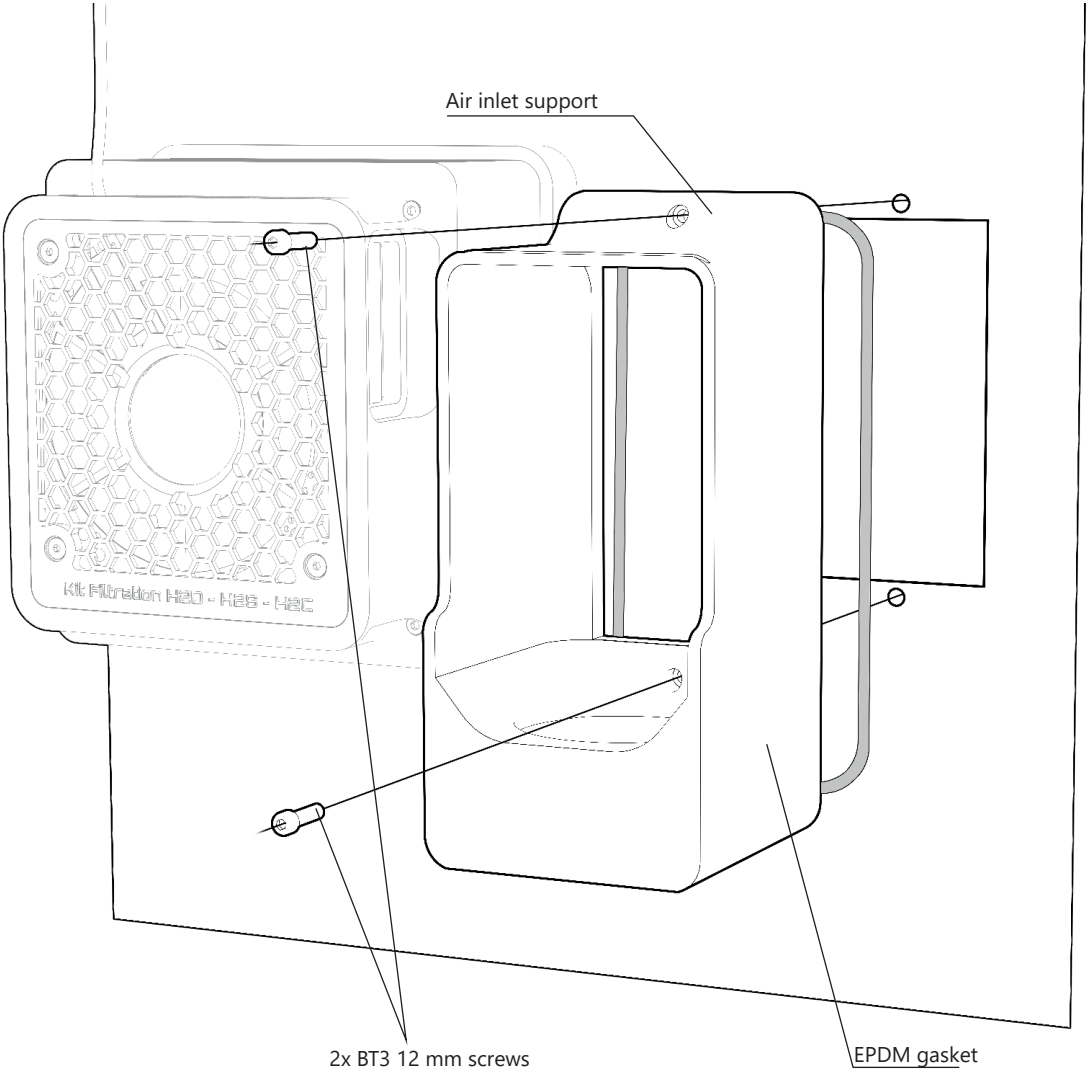

7. AIR INLET SUPPORT: SECURE THE HOSE AND THE PLUG

Once the air inlet support is fixed, insert the hose under the air inlet support. At the bottom, fit the waste outlet plug.

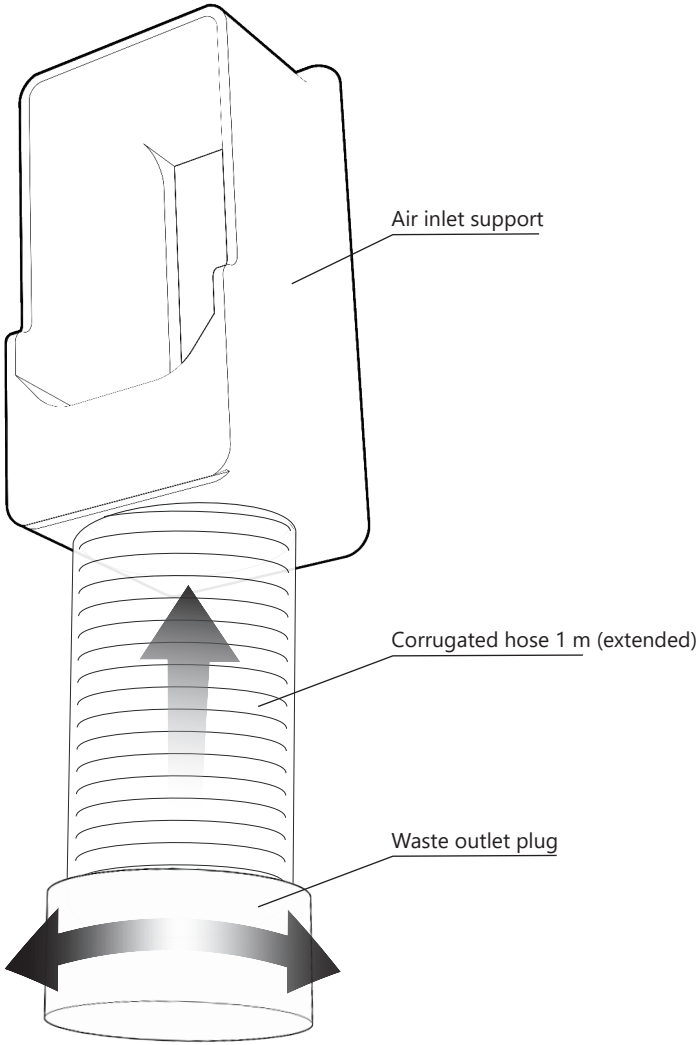

8. WASTE MANAGEMENT

To remove waste, loosen the waste outlet plug.

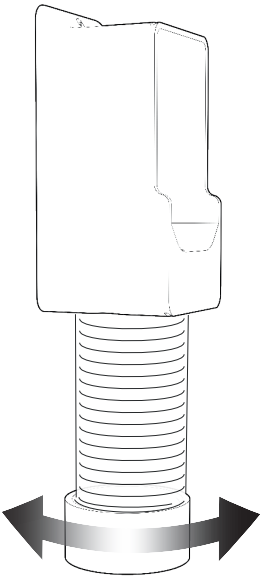

1. Turn the waste outlet plug.

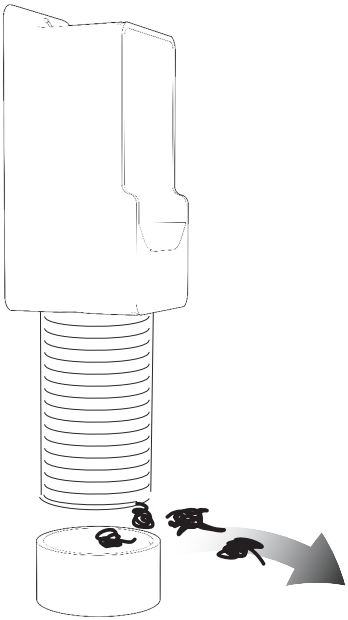

2. Remove the waste.

9. HOW TO POSITION THE HOSE

Place the hose and the waste outlet plug in the most accessible position depending on your setup.

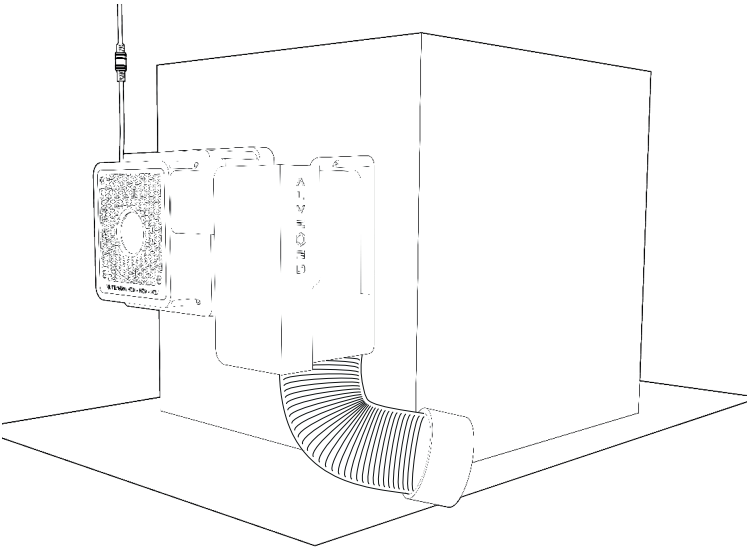

Example 1: hose on the side.

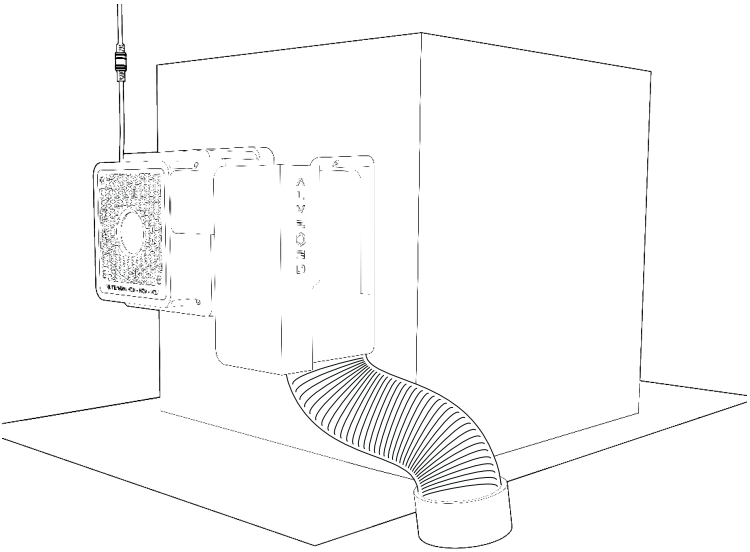

Example 2: hose downwards.

10. SEALING: SLIDING BLOCK

Slide the filtration housing fully onto its support and adjust the sliding block to seal against the housing.

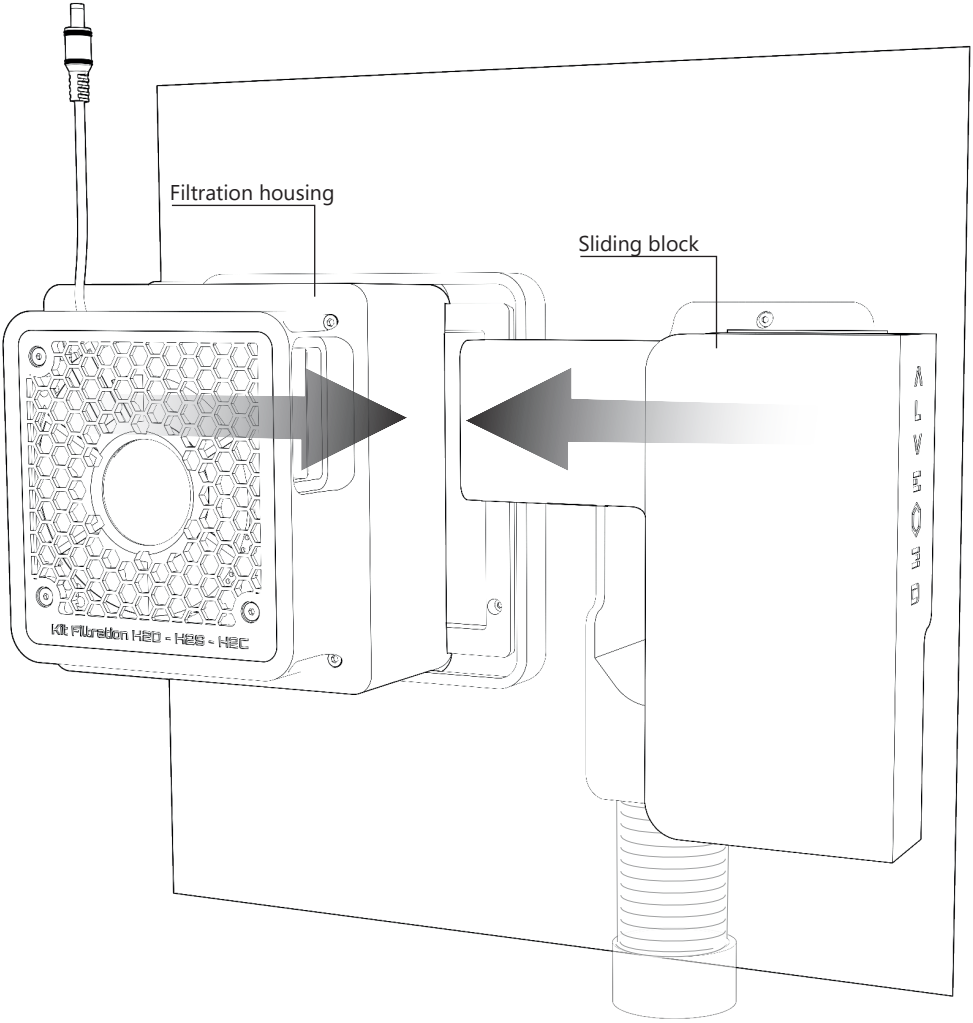

11. FLAP: AIRFLOW MANAGEMENT

Use the guide's sliding block to direct airflow depending on the filament:

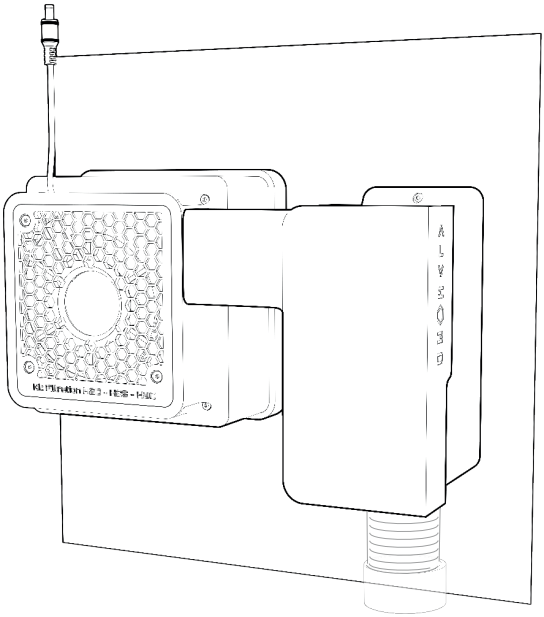

1. Sliding block fully closed:
ABS
ASA
PC
Nylon

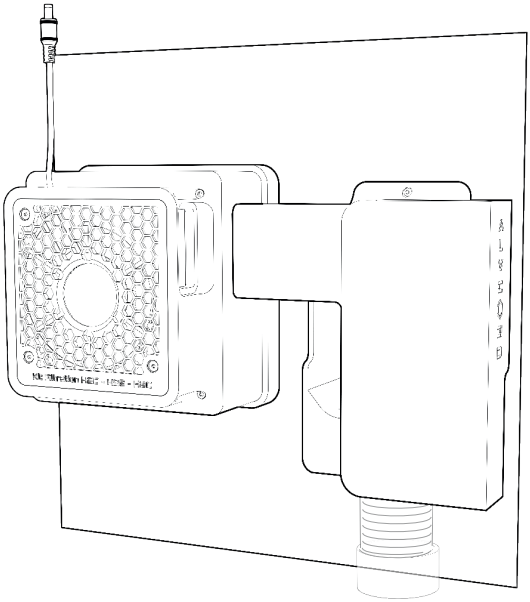

2. Sliding block half-open:
PETG

Sliding block open:
PLA
TPU

12. CONNECT THE ELECTRICAL COMPONENTS

1. Connect the IR receiver to the fan's male connector.
2. Plug the 24V power supply into the IR receiver's female connector.

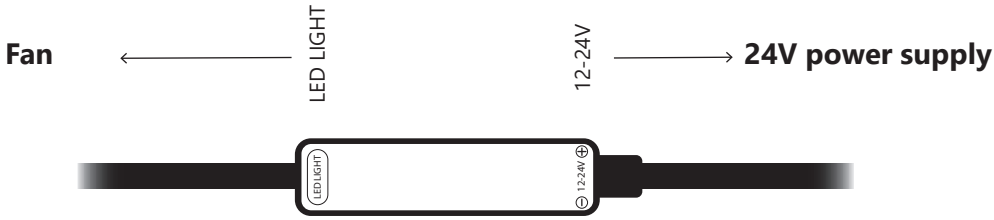

1. Fan -> IR receiver **2. IR receiver -> 24V power supply**

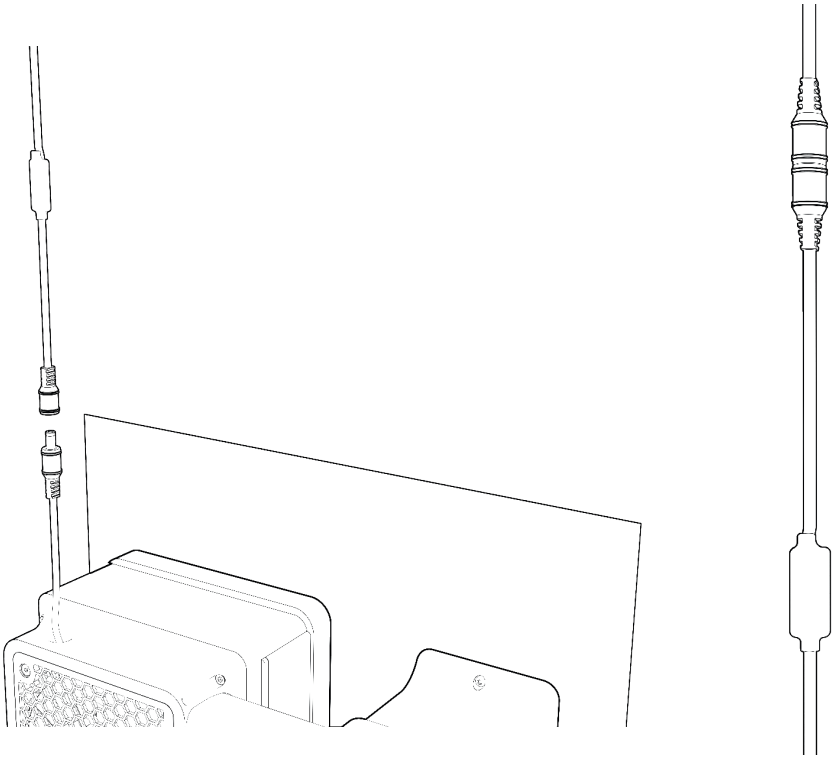

Filter service life

The service life of a P4D-R filter depends on many factors such as: the type of plastic used for printing, the melting temperature, the concentration of nanoparticles and volatile organic compounds (VOCs), humidity level ... We recommend replacing the filter according to the table below:

Filter replacement	Heavy use	Occasional use
	4 months	8 months

We recommend not exceeding 900 hours of use per filter.

Filter replacement tracking:

	Date
Purchase date	
Replacement 1	
Replacement 2	
Replacement 3	
Replacement 4	
Replacement 5	
Replacement 6	
Replacement 7	
Replacement 8	
Replacement 9	
Replacement 10	

Breathe! You're filtering!

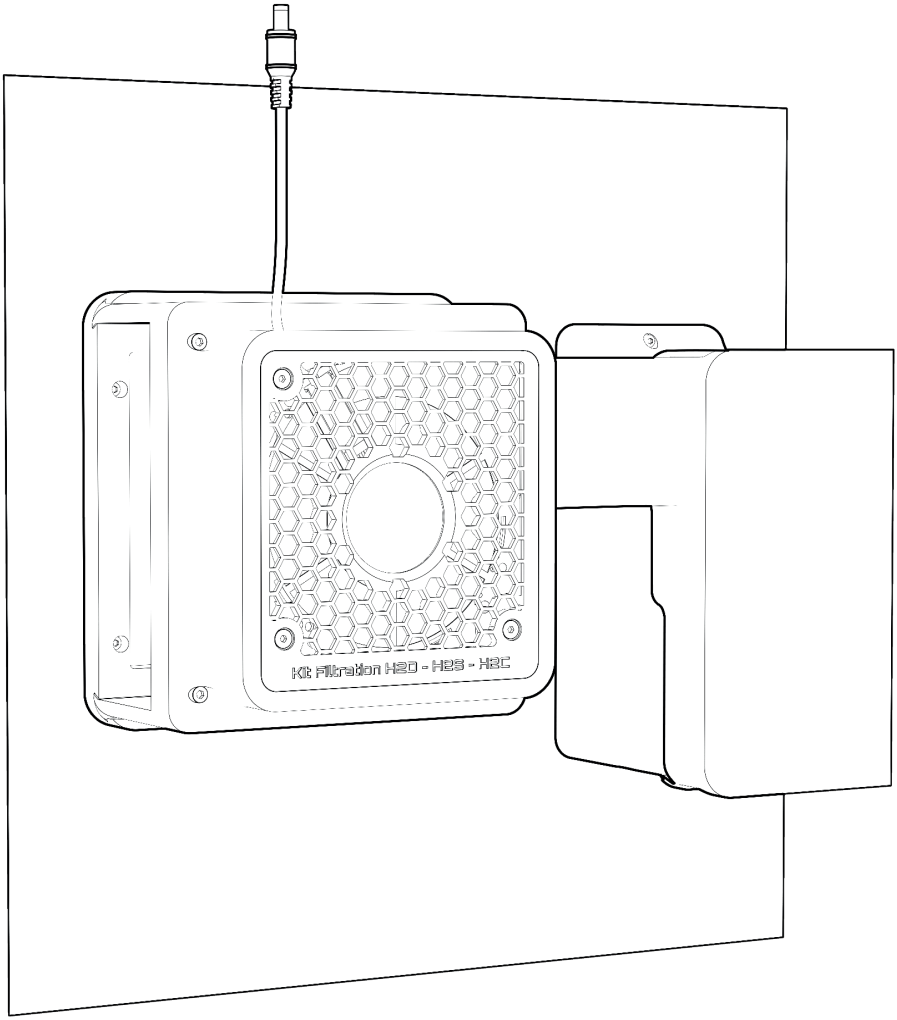

Developed in France

ALVEO3D
460 Rue de la Leysse
73000 Chambéry
France

contact@alveo3d.com